ITEM NO.	PART NUMBER	QTY.
1	12in Corner Block	5
2	10FT Truss	12

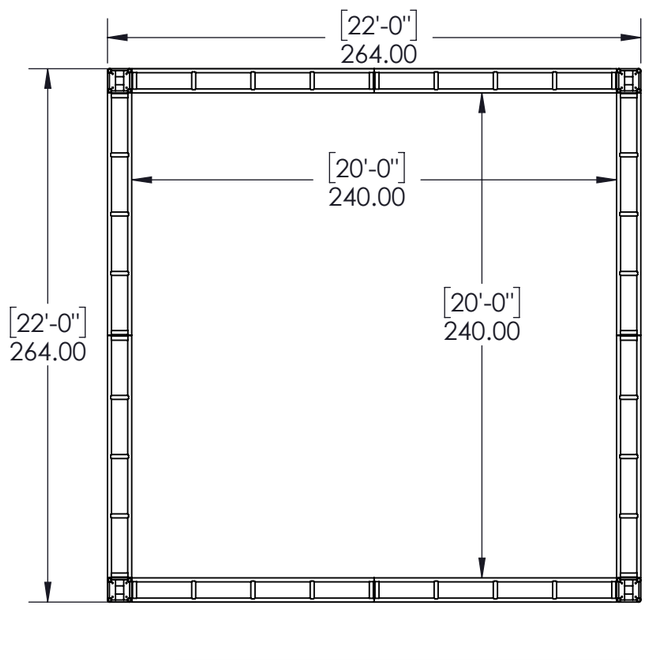

PLAN 2

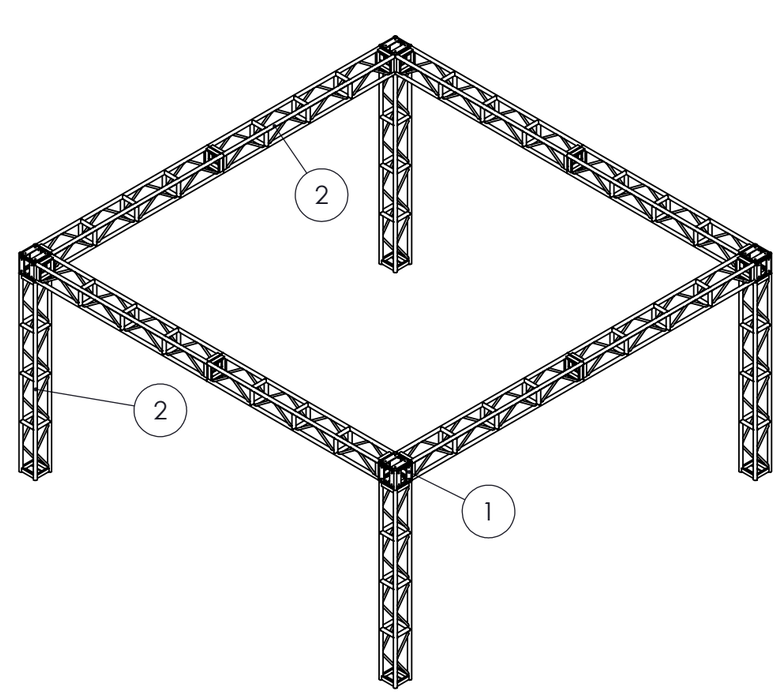

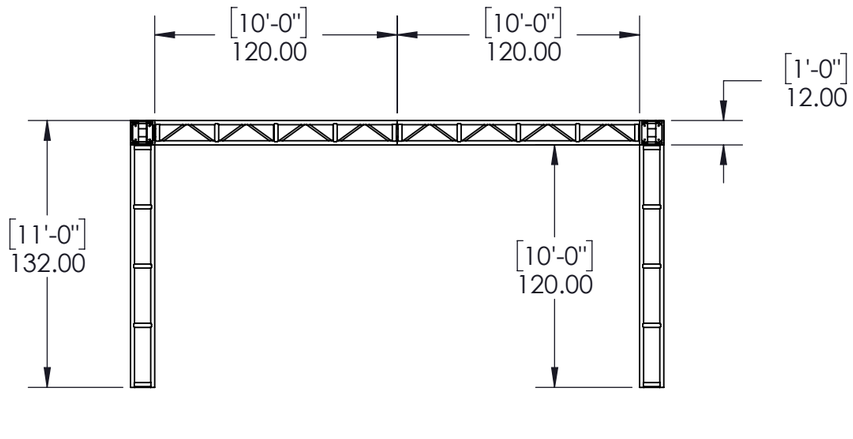

FRONT ELEVATION 1

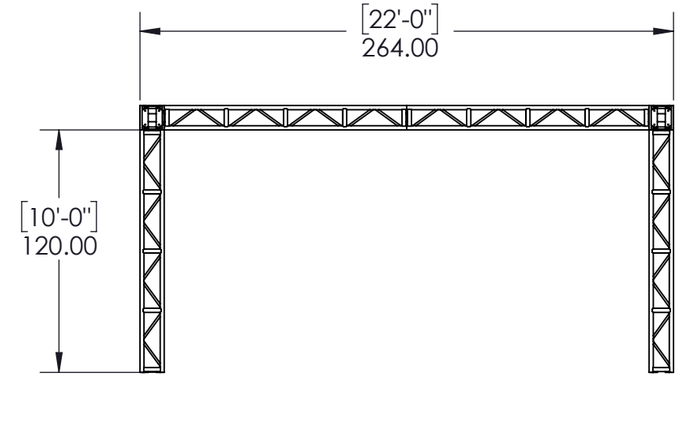

END ELEVATION 3

Weight: LBS

Project Name: Gallagher
Drawing Name: 20ftX20ftx10FT H I.D.
Project Number: RQXX
Drawn by: Dan pace
Drawing Number: 20ftX20ftx10FT H I.D.

Date: 10/4/2016
Scale: 1:60 @11in x 17in
Rev Date: 1/23/2017
Sheet: 1 of 1
Rev: 1

GALLAGHER STAGING & PRODUCTIONS
15701 Heron Ave,
La Mirada,
CA 90628
TEL : +1 (714) 690 1559
www.gallagherstaging.com

THIS DRAWING IS PROPERTY OF **GALLAGHER STAGING AND PRODUCTIONS** AND CANNOT BE DUPLICATED, MODIFIED OR USED FOR ANY OTHER PURPOSE WITHOUT WRITTEN PERMISSION FROM GALLAGHER STAGING. USE OF THIS DRAWING FOR BIDDING IS STRICTLY PROHIBITED. VERIFY ALL DIMENSIONS, SPECIFICATIONS, AND CONDITIONS BEFORE USING THIS DRAWING FOR CONSTRUCTION. THIS DRAWING IS CONFIDENTIAL AND SHOULD NOT BE DISCLOSED TO A 3RD PARTY WITHOUT WRITTEN PERMISSION FROM **GALLAGHER STAGING AND PRODUCTIONS.**

All dimensions in inches unless otherwise stated Do **NOT** measure undimensioned features **IF IN DOUBT - ASK!**